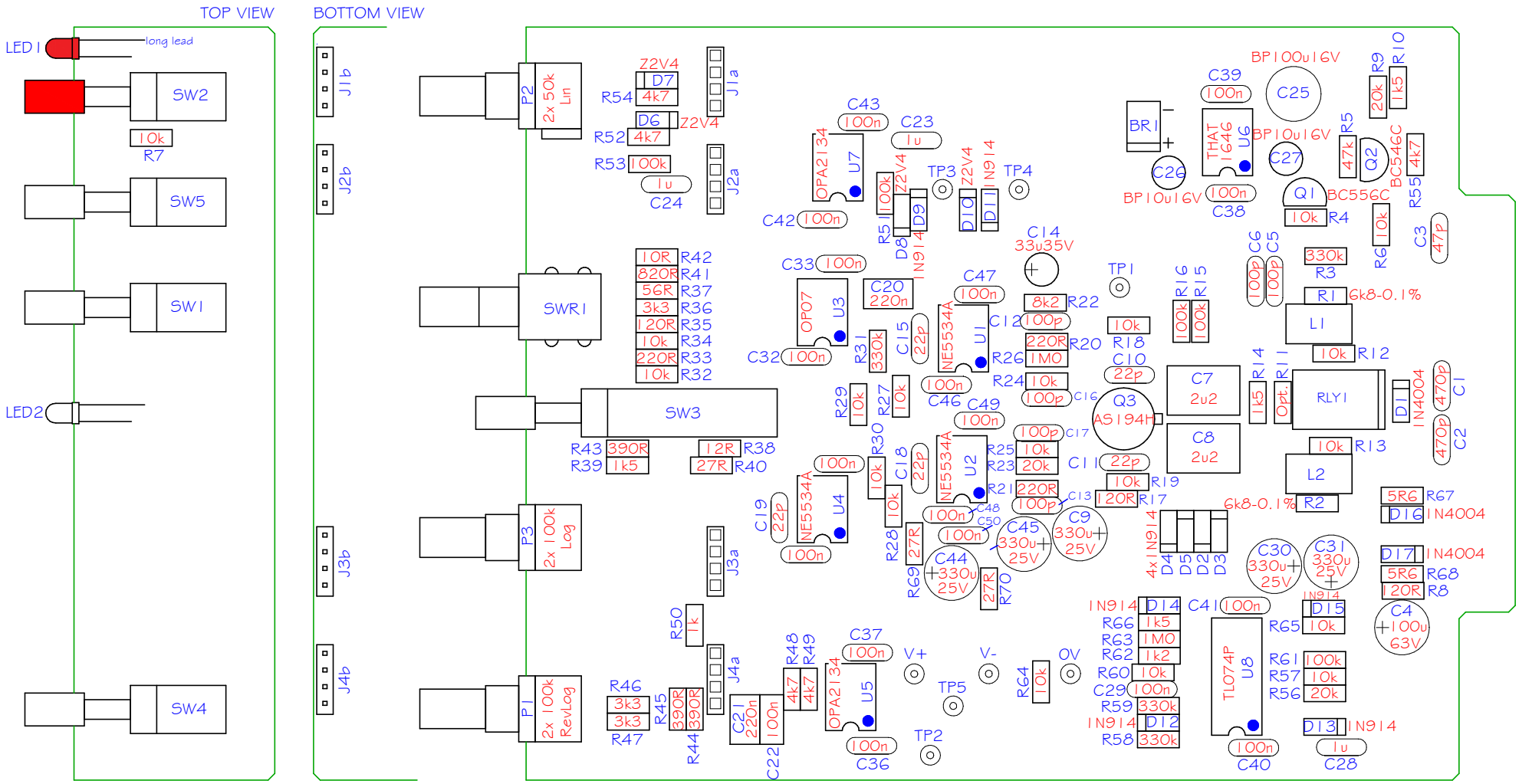


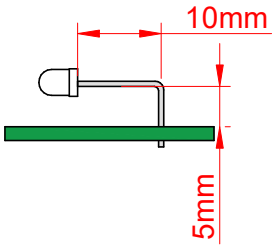


| | | |
|---|---|---|
| Sound Skulptor | Title: MP4500 - Layout | Sch Rev: 1.2 |
| | www.soundskulptor.com | PCB Rev: 1.4 |
| | Copyright ©2026 to today Soundskulptor | Last mdified: 05/06/2026 |