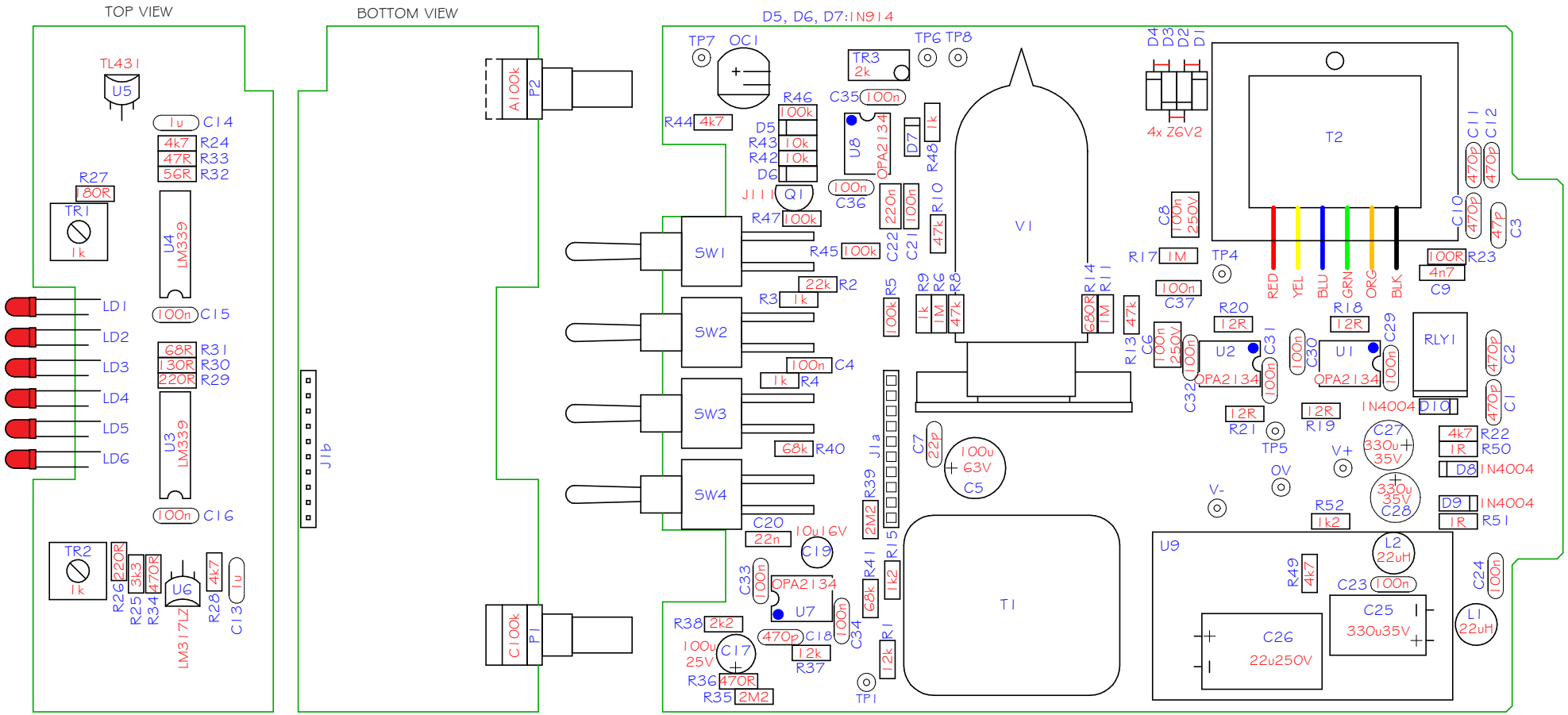

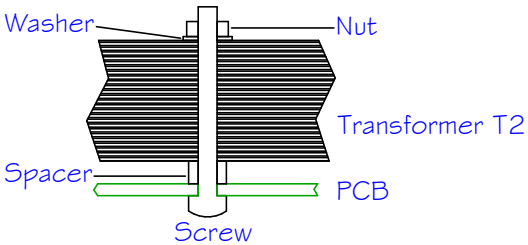

Sound Skulptor	Title: LA502-T - Layout	Sch Rev:	1.2
	www.soundskulptor.com	PCB Rev:	1.4
	Copyright ©2026 to today Soundskulptor	Last mdified:	18/06/2026